FLYBOX®

Fuel P

(Omnia57-80 family)

Installation and User Manual, Safety Instructions and Warning Booklet

This product is not TSO'd and cannot be installed into traditional FAA Part 23 and similarly Type-Certificate Aircraft

Document A2021FUEL L-P
Revision#2.0, 04/2021
For firmware version 1.8

This booklet is suitable for printing in A5 format.

SECTIONS

INTRODUCTION

IMPORTANT NOTICE AND WARNINGS

INDEX

OMNIA FAMILY SYSTEM OVERVIEW

MECHANICAL INSTALLATION

ELECTRICAL INSTALLATION

INSTRUMENT SETTINGS

OPERATING INSTRUCTIONS

TECHNICAL SPECIFICATIONS

WARRANTY

DISCLAIMER

Screen example

Thank you for purchasing a Flybox® **Omnia** instrument.

Omnia instruments are available in 2 different formats, both with the same functionality:

Omnia57 (2-1/8") and **Omnia80** (3-1/8").

This manual describes both formats.

Our intent in developing the **Omnia** instrument family was to create a light and compact product, powerful and easy to install and use.

The **Omnia** instrument family is equipped with a state-of-the-art highly visible display, a powerful 32 bit microcontroller and the latest generation of solid state sensors to ensure reliability and accuracy over time.

The owner has the possibility to keep the instrument software up-to-date by downloading the latest available revision from the www.flyboxavionics.it website and installing it using a USB pen drive.

We are confident our products will be satisfactory and will make your flying experience a pleasant one.

Symbols used in the Installation and User Manual, Safety Instructions and Warning Booklet

NOTE: Used to highlight important information.

CAUTION: Used to warn the user, it indicates a potentially hazardous situation or improper use of the product.

WARNING: Used to indicate a dangerous situation that can cause personal injury or death if the instruction is disregarded.

WARNING: These instructions must be provided to users before use, and retained for ready reference by the user.
The user must read, understand (or have explained) and heed all instructions and warnings supplied with this product and with those products intended for use in association with it. Always keep a copy of the Installation and User Manual, Safety Instructions and Warning Booklet on the aircraft. In case of change of ownership, the Installation and User Manual, Safety Instructions and Warning Booklet must be delivered together with all of the other papers.

WARNING: Read the Installation and User Manual, Safety Instructions and Warning Booklet before installing the device on your aircraft and follow the procedure described therein.

WARNING: This device is intended to be installed on NON-TYPE CERTIFIED AIRCRAFT ONLY, as it does NOT require any air operator's certificate. Refer to your national aviation authorities to check if this device can be installed on your aircraft.

WARNING: It is the owner's responsibility to test this device before operating the aircraft and to make sure nobody is using it unless properly instructed and authorized to do so.

WARNING: Once the installation process is completed, it is extremely important to test the device before taking off to make sure it works properly. Therefore, we strongly suggest to double check all of the electronic instruments available on the aircraft and to turn them on to verify they function correctly.

WARNING: This device is operated through a software which from time to time can be updated and/or subject to change. Please, always refer to the Installation and User Manual, Safety Instructions and Warning Booklet for the last updated version of the software available at www.flyboxavionics.it

---

WARNING: It is the responsibility of the installer to properly install the device on the aircraft. In case of calibration, or any technical or functional customization of the device, the responsibility lies with the individual who carried out such operation.

FAILURE TO DO SO MAY RESULT IN SERIOUS INJURY OR DEATH.

WARNING: If this product is not used correctly, or it is subjected to additions or alterations, the effectiveness of this device may be considerably reduced.

WARNING: Alterations, additions, or repairs not performed by the instrument manufacturer or by a person or organization authorized by the manufacturer shall negate any warranty.

WARNING: Do NOT rely on the Omnia Fuel L-P device ONLY to determine the quantity of fuel available in the tanks.

WARNING: The unit isn't waterproof. Serious damage could occur if the unit is exposed to water or spray jets.

NOTE: The consumer decides of his own free will if the purchased product is suitable and safe for his need. If the consumer does not agree with the notices contained in this Installation and user Manual, Safety Instructions and Warning Booklet, do not install this instrument in his aircraft.

NOTE: Flybox Avionics reserves the right to change or improve its products as well as terms, conditions, and notices under which their products are offered without prior notice.

NOTE: The Installation and User Manual, Safety Instructions and Warning Booklet will be updated annually if needed.

All changes or updates will be published on our website www.flyboxavionics.com in the "support" section.

NOTE: Check the website www.flyboxavionics.it periodically for software and manual updates.

For some products, registration may be required to receive important news or information on available firmware updates or to receive security information.

INDEX

SECTION 1 - Omnia Family System overview…..…… 1
1.1 - Construction Features ……..……..…. 1
1.2 - Ergonomics……...…...…….……. 1
1.3 - Interconnection Ability ……...…...……..…….. 2
1.4 - Easy Software Update ……...…...…….……. 3
1.5 - Easy Datalog Saving ……...…...…….…… 3
1.6 - Interfaces ……..…...…...…….…… 4

SECTION 2 - Mechanical installation…..…… 5
2.1 - Omnia57 Mechanical Dimensions……..…..……..…… 6
2.2 - Omnia80 Mechanical dimensions…… 7
2.3 - Omnia80 max Screw Lenght…… 8

SECTION 3 - Electrical Installation…...…….…….…… 9
3.1 - Rear Panel Connections……..…….……..…… 9
3.2 - 22 Pole Female Connector Wiring…… 10
3.3 - 22 Pole Connector Table……..… 11
3.4 - Sensors Electrical Connections……..…..…..…...…… 12
3.5 - CAN bus Connection Wiring…….…… 13
3.6 - CAN Bus Connector Tables…… 14

SECTION 4 - Instrument settings…….…….…… 15
4.1 - Minimum Settings Before First Use…..…….…… 15
4.2 - Panel Indicators And Commands…..…….…… 16

4.3 - Setup Menu Navigation…… 17
4.4 - Main Setup Menu… …… 18
4.5 - Fuel Pressure Submenu…… 20
4.6 - Backlight Submenu…… 24

SECTION 5 - Operating Instructions…… 28
5.1 - Firmware Upgrade…… 28
5.2 - Backup/Restore…… 31
5.3 - Use Of The Instrument…… 33
5.4 - Logger…… 34

TECHNICAL SPECIFICATIONS…… 35

WARRANTY…… 36

CLEANING…….. 36

TERM OF USE AND DISCLAIMER…… 37

OMNIA FAMILY SYSTEM OVERVIEW

The **Omnia57-80** instrument family has many innovative features, common to all models as described below.

1.1 CONSTRUCTION FEATURES

Omnia instrument family is built from solid aluminum alloy, CNC milled and powder coated to last a long time over the years always showing a new appearance.

1.2 ERGONOMICS

- Large 2.4 inch (57), 3.5 inch (80), TFT display, 320x240 Pixels, 1000 nits, antiglare surface, sunlight readable, wide temperature range.

- A high quality knob encoder with push button for easy access to all features.

- Backlight auto dimming feature with one optional sensor for all the Omnia57 installed in the panel.

1.3 INTERCONNECTION ABILITY

All the instruments of the **Omnia** family can be connected together via CAN1 to form a communication network, making some data exchange operations simpler.

The software update of a **Omnia** instrument connected in group takes place through the CAN1 bus communication with the instrument that has the USB pen drive connected. This means that the USB connection is made to a single instrument, and the information will be forwarded via CAN bus to or from all the others in the group. **Omnia57** and **Omnia80** instruments can be mixed on the same CAN1 bus.

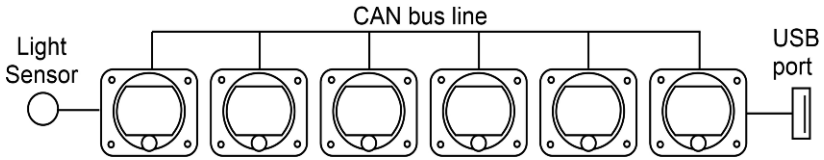

Up to 16 Omnia can be connected together through the CAN 1 bus.

The configuration data and the data logger of the interconnected instruments are saved or restored via CAN1 bus on the same USB pen drive. A single brightness sensor can provide information to all the connected instruments to automatically adjust the backlight intensity.

1.4 EASY SOFTWARE UPDATE

The user can download any new firmware, when available, from Flybox website, connect a USB pen drive to the instrument and freely update it with the last features.

With one USB connection only, it will be possible to update every instrument installed in the panel. If more **Omnia** are installed and properly connected, they will search for the right firmware through the CAN1 bus.

1.5 EASY DATALOG SAVING

Easy logging of the data for debug purpose. If needed, each **Omnia** unit can save a last flight log on the USB pen drive. The user can then send the log via e-mail to Flybox support for a help/support request.

NOTE: for easy access to the USB port, it is recommended to install a USB extension cable in one of the **Omnia** instruments and store the free connection in an easily accessible part of the dashboard. It is not recommended to use extension cords longer than 50 CM.

1.6 INTERFACES

All the **Omnia** instruments have the following common interfaces:

2 separate CAN BUS: CAN1 bus is used to connect the **Omnia** instruments together, CAN2 bus is used to interface them with other Flybox instruments or with external devices like Engines ECUs or new devices to be developed in the future.

2 RS232 serial ports: used to connect the **Omnia** instruments to an external GPS (when applicable). This feature appears in some models only.

1 Sensor Light Input: if connected, it allows the automatic backlight intensity adjustment, one sensor for all the instruments connected in the same CAN bus.

2 Power outputs for sensors: one 12 V 500mA@60°C and the other 5 V 350 mA@60°C, both protected from short circuit.

If the current on one of the outputs is too high, a caution message will appear.

Caution!
High current PIN 2

1 Alarm output: all the **Omnia** instruments can activate an external warning device like a lamp or a small relay through this NPN transistor output.

MECHANICAL INSTALLATION

It's recommended to choose a position that permits optimal display visibility. The instrument is supplied with four M4 screws to install it to the panel, if you use other screws consider that the maximum thread length inside the instrument body is 10mm (see the picture below).

Damage to the instrument due to the use of a screw longer than the permitted lenght will not be repaired under warranty.

2.1 OMNIA57 MECHANICAL DIMENSIONS

The **Omnia57** instrument fits in a standard 2 ¼" (57 mm) panel cutout.

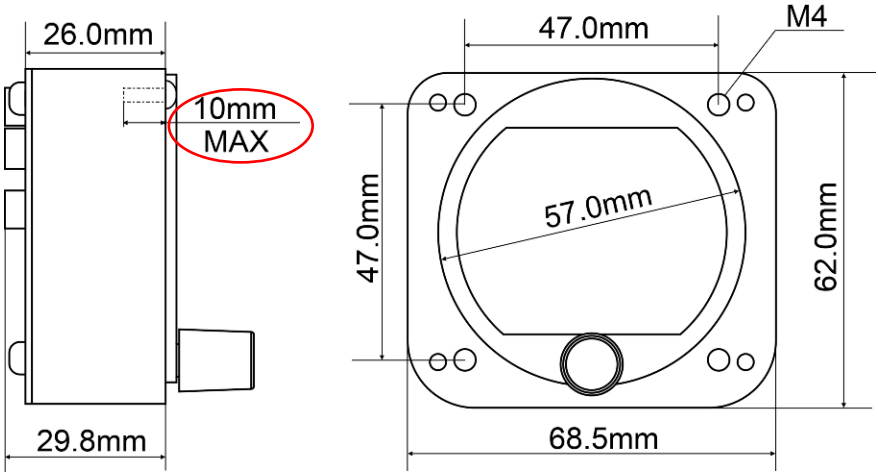

CAUTION: The maximum screw length inside the instrument body is 10mm.

NOTE: For an installation without interference, consider making a hole of at least 57.5 mm diameter.

2.2 OMNIA80 MECHANICAL DIMENSIONS

The **Omnia80** instrument fits in a standard 3 1/8" (80 mm) panel cutout.

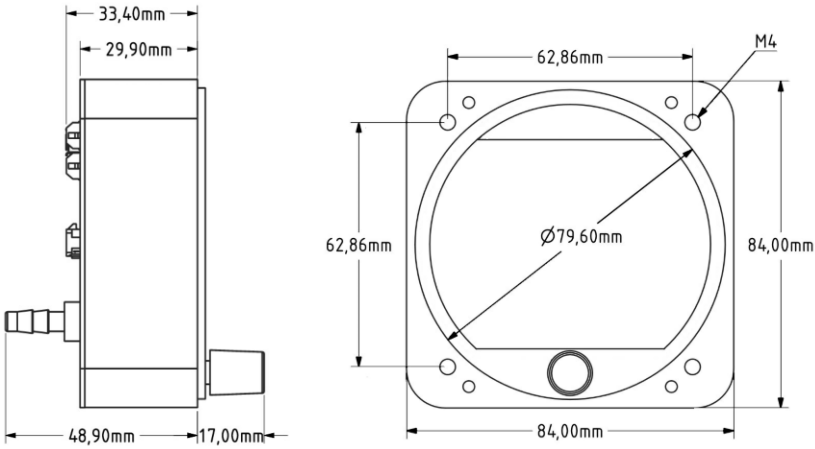

NOTE: For an installation without interference, consider making a hole of at least 80.5 mm diameter.

2.3 OMNIA80 Max screw length

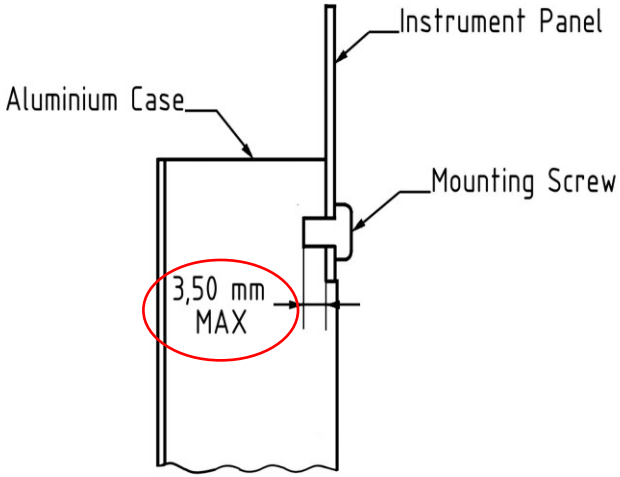

The screws supplied (M4x6mm), are suitable for panel thicknesses between 1.5 mm and 2 mm.

Flat nylon washers are also supplied with the screws for use with very thin panels.

CAUTION: The maximum screw length inside the instrument body is 3.5mm.

Using screws that are too long will damage the display and cannot be repaired under warranty.

ELECTRICAL INSTALLATION

3.1 REAR PANEL CONNECTIONS

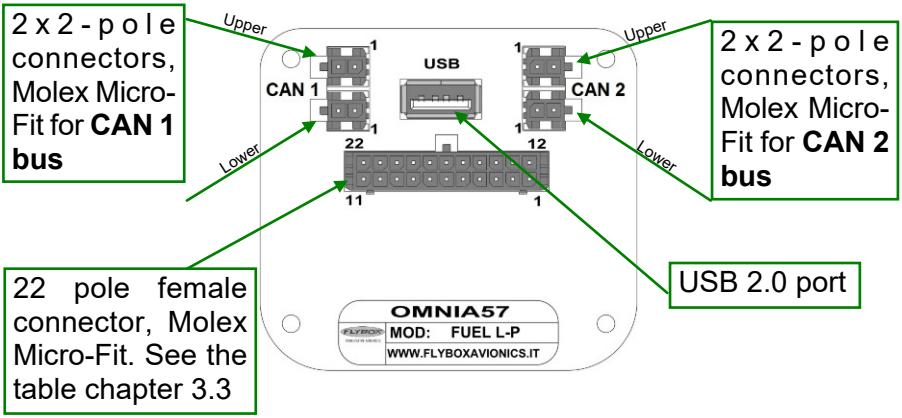

The required connectors and terminals are supplied with the instrument.

The manufacturer's codes are:

Molex P/N 43025-0200 (2 pole housing)
Molex P/N 43025-2200 (22 pole housing)
Molex P/N 43030-0007 (female crimp terminal)

The terminals can be crimped with:

- Flybox Professional Crimping Tool cod. 603000
- Molex tool P/N 63819-0000

3.2 - (22 POLE) FEMALE CONNECTOR WIRING

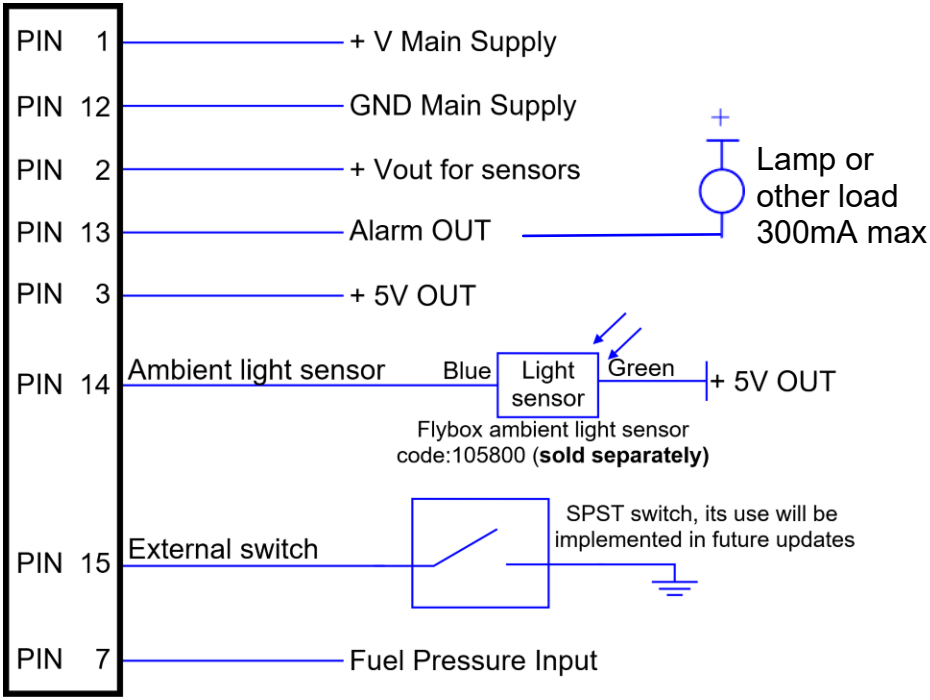

WARNING: Voltage peaks on the supply line exceeding the operating limits can damage the device.

3.3 - (22 POLE) CONNECTOR TABLE

PIN	I/O	Signal
1	I	+V Main supply, 10-30Vdc, with a proper breaker, see note1
2	O	Vout for sensors, it delivers the same voltage supplied on the Pin 1, short circuit protected and limited to 500mA
3	O	5V out for sensor, short circuit protected and limited to 350mA
7	I	Fuel Pressure input
12	I	GND main supply
13	O	Alarm Out, NPN 300 mA (not protected)
14	I	Ambient light sensor input
15	I	External switch

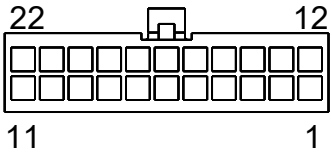

Molex P/N 43025-2200 (22 pole housing). View from wire insertion side.

Note1: Since the current consumption is 60mA, consider a breaker of 1A or less.

3.4 SENSORS ELECTRICAL CONNECTIONS

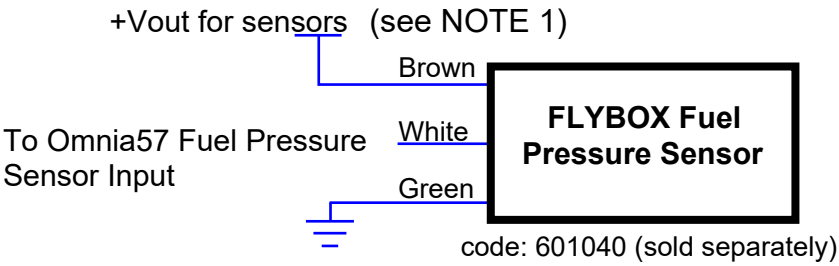

NOTE 1: use sensors which support the voltage supplied to PIN 1 only.

3.5 CAN BUS CONNECTION WIRING

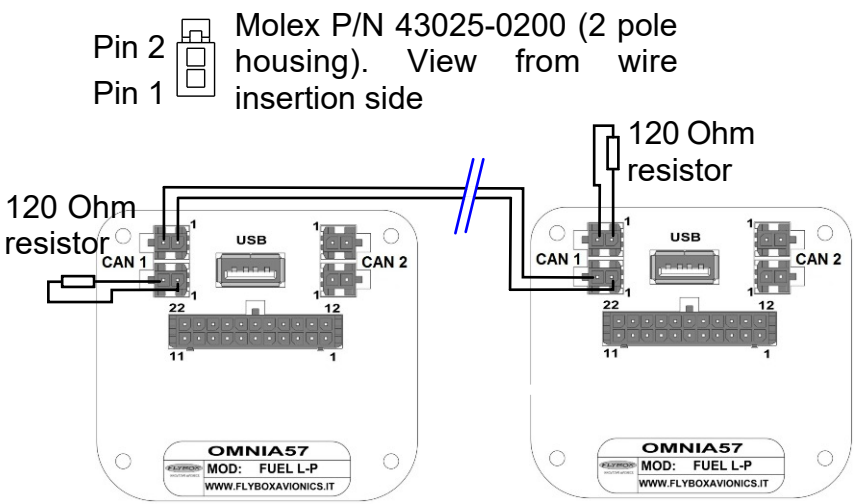

CAN bus Wiring Information

The basic electrical architecture of a CAN bus consists of a single twisted or shielded wire pair with a device connected at each end. Each end must be terminated with a 120 ohm resistor, Flybox code 105810. Up to 16 Omnia can be connected together through CAN 1 bus.
Ready-made termination resistors and wiring for connecting several Omnia together are available in different lengths: 25cm, 50cm, 100cm.
See the website www.flyboxavionics.it for details and how to order.

3.6 - (2 POLE) CAN BUS CONNECTOR TABLES

2 Pole **CAN 1** Upper Connector

PIN	I/O	Signal
1	I/O	**CAN 1 H** Internally connected with the Pin 1-CAN 1 H (Lower connector)
2	I/O	**CAN 1 L** Internally connected with the Pin 2-CAN 1 L (Lower connector)

2 Pole **CAN 1** Lower Connector

PIN	I/O	Signal
1	I/O	**CAN 1 H** Internally connected with the Pin 1-CAN 1 H (Upper connector)
2	I/O	**CAN 1 L** Internally connected with the Pin 2-CAN 1 L (Upper connector)

2 Pole **CAN 2** Upper Connector

PIN	I/O	Signal
1	I/O	**CAN 2 L** Internally connected with the Pin 1 CAN 2 L (Lower connector)
2	I/O	**CAN 2 H** Internally connected with the Pin 2 CAN 2 H (Lower connector)

2 Pole **CAN 2** Lower Connector

PIN	I/O	Signal
1	I/O	**CAN 2 L** Internally connected with the Pin 1 CAN 2 L (Upper connector)
2	I/O	**CAN 2 H** Internally connected with the Pin 2 CAN 2 H (Upper connector)

INSTRUMENT SETTINGS

4.1 MINIMUM SETTINGS BEFORE FIRST USE

***CAUTION**:* Before using Omnia Fuel P in flight, you must set the following parameters as explained in the instructions on the following pages and in this sequence:

1. Set all the parameters in the “Fuel Pressure” Submenu.
2. Check if the indications are correct.

***WARNING**:* In the absence of the above operations, or if they are not performed correctly, you can not consider as reliable the indications of the instrument.

4.2 PANEL INDICATORS & COMMANDS

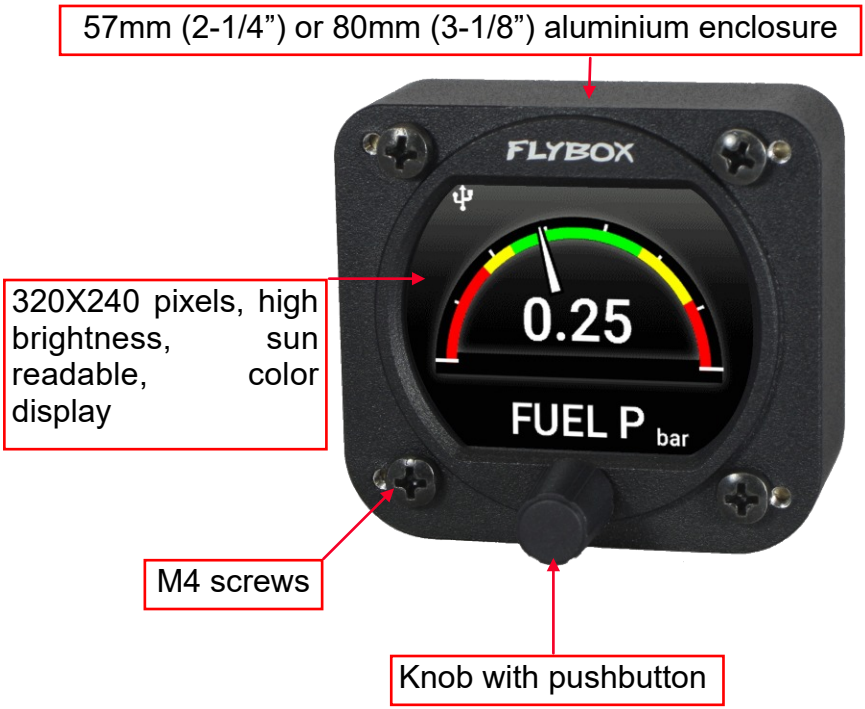

The knob can be rotated to select the functions and increment or decrement the values while pressing it to confirm.

4.3 SETUP MENU NAVIGATION

Navigation through the menus is very simple and fast using the knob:

- Press the knob for 1 second to enter in the Setup Menu. The menu automatically disappears if you don't press or rotate the knob for 5 seconds.

- Rotate the knob to navigate through menus and submenus items.

- The setup system is organized in menus and submenus; a submenu is a term used to describe a menu that is contained within another menu.

- Press the knob to enter in the selected item.

- The knob can be rotated to select the functions and increment or decrement the values while pressing it to confirm. To exit without changing while editing a number or multiple choice, keep pressed the knob for 3 seconds.

- The first items on every menu are Exit or Back. "Exit" is used to quit the Setup and go directly to the main screen, "Back" is used to go back to the previous level.

Edited data are saved when returning to the main screen. If you turn off the instrument while inside a menu, your changes will be lost.

4.4 MAIN SETUP MENU

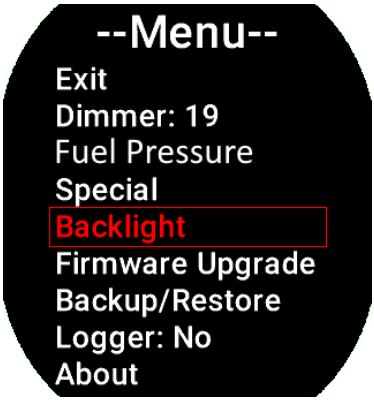

Exit: confirm to “exit” from the setup menu and go back to the main screen.

Dimmer: adjust display brigtness from 1 (min brightness) to 19 (max brightness). Default value=19. The adjustment works in Manual mode only.

Fuel Pressure: enter to setup the Fuel Pressure gauge. Go to chapter **4.5** for a full description.

Alarm Tone: choose “Yes” only if the alarm output will be connected to the optional Flybox “Audio Tone Adapter”. This way the output generates a high-pitched tone instead of a continuous signal.

Background: select which background you prefer between “faded” and “dark”.

Restore Defaults: enter to restore defaults. **Caution,** the restore default operation returns the instrument to the factory settings. **It will require double confirmation.**

All settings, except calibration data, will be erased. **It will require double confirmation.**

Backlight: set the backlight in “Manual” or “Automatic” mode. Go to chapter **4.6** for a full description.

Firmware Upgrade: enter to upgrade the firmware. Go to chapter **5.1** for a full description.

Backup/Restore: enter to save and load settings. Go to chapter **5.2** for a full description.

Logger: enable to save a flight session data. Go to chapter **5.4** for a full description.

About: enter to see instrument information.

Example of “About Page”

4.5 Fuel Pressure submenu

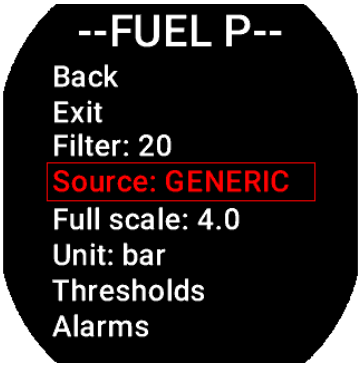

Back: go back to previous menu.

Exit: confirm to go directly to the main screen.

Filter: increase the number if the reading is affected by noise on the input signal, decrease the value if the reading is delayed related to the input signal. Default = 20, Min = 1 (faster), Max = 100

Source: select here the source for the Fuel Pressure readings; the available sources are:

Generic, is used for sensors of other brands which have an output signal of 0.5V to 4.5V. When selecting Generic, a **Full scale** parameter also appears where you can set the sensor's full scale value in the selected unit.

FBX, to read the data from a Fuel Pressure sensor if connected. Optional Flybox code: 601041

912iS and 915iS, to read the data from the Rotax CAN bus. In order to have the correct pressure with these engines it will be necessary to also install the sensor Flybox cod. 601041

ULP125, ULP500, ULPower engines CAN bus

KAV15PSI, from Kavlico

Unit: Select “bar” or “psi”, default is “bar”

NOTE: Each time the unit is changed, the full scale value is reset to zero, so it needs to be reinserted.

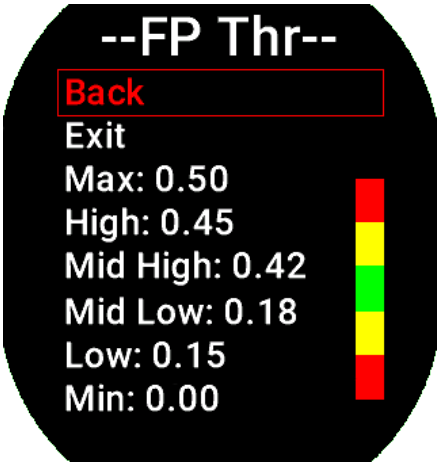

Thresholds: set all the thresholds for the Fuel Pressure gauge.

Rotate the knob to highlight the threshold you want to change, push and change the value, push again to confirm. Default thresholds are at 0.

NOTE: Start to change the maximum thresholds and then, gradually, the lower thresholds.

NOTE: To make a colored portion disappear, give the same value to the low and high thresholds of that color.

Alarms: enter to go in the Fuel Pressure Alarm menu.

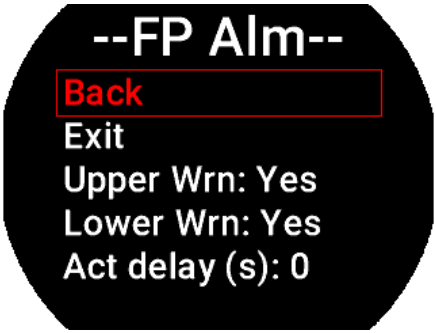

Back: go back to previous menu.

Exit: confirm to go directly to the main screen.

Upper and Lower Warning: select “Yes” to enable or select “No” to disable the upper and the lower alarm output.

Act delay: Select a delay in seconds before the alarm is triggered. When the Low or the High thresholds are reached, the alarm output will be activated after the set time. This option can be useful to avoid continuous alarms when the fuel pressure is stationary at values close to the set threshold.

Default = 0s
Min = 0s (faster)
Max = 10s (slower)

The alarm is only triggered if the Warning parameter is set to "Yes". The alarm event triggers both the flashing message on the screen and the alarm output. Both can be reset by pressing the knob but the rectangle behind number remains in red.

4.6 Backlight Submenu

Back: go back to previous menu.

Exit: confirm to go directly to the main screen.

Mode: select to choose between “Manual” and “Auto”. When in “Manual” mode, the brightness can be changed with the dimmer function from the main menu, from 1 (min brightness) to 19 (max brightness). Default value=19.

Selecting “Auto”, 3 new parameters will appear in the list

Source: choose "Sens" to read the brightness from the optional sensor connected to the instrument itself or "CAN" to read the ambient brightness from the CAN1 bus if the brightness sensor is connected to another **Omnia** instrument connected in cluster.

In the case of 2 or more instruments connected in cluster via CAN1 bus, set "Sens" only on the instrument to which the sensor is connected and set “CAN” in all others.

Smoothness: choose how fast the backlight changes when there is a variation of light on the sensor.

Default= 1
Min= 1 (faster)
Max= 3 (slower)

NOTE: If the mode function is set to AUTO, during a software update and when performing a backup/restore, the light automatically switches to MANUAL mode during that operation.

Min light (%): choose minimal backlighting when the environment is dark.

Default= 1
Min= 1 (dark)
Max= 20 (bright)

NOTE: if you upgrade to this backlight version for the first time due to a firmware update, the backlight menu items will be reset to their default values. Re-adjustment of the "Smoothness" and "Min light" parameters may be necessary.

Page Intentionally Left Blank

OPERATING INSTRUCTIONS

5.1 FIRMWARE UPGRADE

The software can be easily updated with new versions, when available. It is advisable to regularly check for new versions on www.flyboxavionics.it > support > software page.

Download the new version and after unpacking it, copy it to a USB stick, possibly free from other files.

To update the instrument it is necessary to connect the USB stick to the instrument you want to update or to any other instrument of the Omnia series installed and clustered via the CAN bus, following the procedure below:

- connect the usb stick to the instrument

- From the main menu of the instrument you want to upgrade select “Firmware Upgrade”.

If the USB stick is not yet plugged-in, a message advising you to insert it will appear:

If already plugged-in, a message indicating the file and the version will appear:

Select and confirm the software you want to write, the following screen will appear:

In case you are installing a version prior to the installed one, a different message will inform that you are **downgrading** and not upgrading the software. Confirm “Yes” to proceed, “No” to exit without writing any software.

(DEV. NAME) is the name of the instrument being update.

Wait until this message will appear and then remove the USB stick. The instrument will reboot with the new software.

Note: if the USB stick is installed on a device other than the one you are updating, the following messages will appear on the 2 devices:

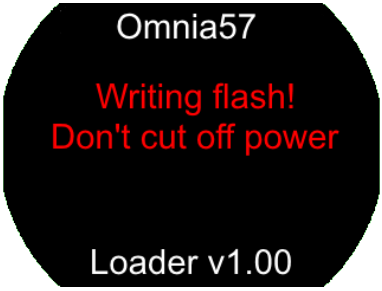

Device is being Update

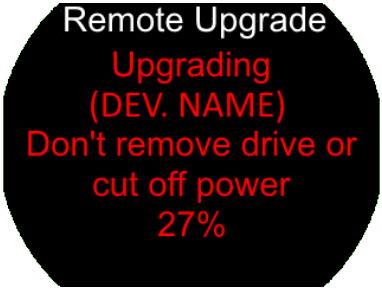

Remote device where the USB is connected

5.2 Backup / Restore

All set parameters and calibrations made in the instrument can be saved in a backup file. This can be useful if you need to restore all the parameters in a new instrument, for example in case of replacement, or if you need help from the instrument manufacturer. In this case, simply send the backup file saved on the USB stick to the Flybox support service. To backup or restore the parameters it is necessary to connect a USB stick to the instrument you want to backup/restore or to any other instrument of the Omnia series installed and clustered via the CAN bus.

From the main menu of the instrument you want to backup or restore the parameters, choose “Backup/Restore”. If the USB stick is not plugged-in yet , a message advising you to insert it will appear

Select “Backup” and push the knob to write the file on the USB stick. When the file is written, this message will appear:

Select “Restore” and push the knob to load the previously saved parameters into the instrument.

Push the knob to reboot, the new parameters are now loaded in the instrument.

5.3 USE OF THE INSTRUMENT

When switched-ON, the display will immediately show the main page.

NOTE: The first time you switch-ON the **Omnia P**, will require settings to be made as explained in the chapter **4.5**.

5.4 Logger

The Logger can be useful for storing flight data on the USB stick, for example to ask for assistance in case of problems.

The data will be stored at 1 second samples and written on a file with some information of the instrument that generated them.

When the USB flash drive is plugged-in to the device to be logged or to any other instrument of the Omnia series installed and clustered via the CAN1 bus, a white icon will appear on the display indicating that the flash drive is connected.

To activate the Logger choose “Yes” from the Main Menu>Logger. The icon will turn **green** when the file is being written and **red** when the Logger is enabled but the USB stick is not connected or in case of writing problems.

NOTE: If several instruments are connected on the same CAN1 bus, the Logger can only be activated on one instrument at a time. The Logger function will automatically switch off each time the instrument is switched off.

TECHNICAL SPECIFICATIONS

- Graphic TFT LCD with backlight and coated glass, dimensions 29x18mm.
- Standard mounting 2-1/4” 57mm and 3-1/8” 80mm.
- Powder painted aluminium case.
- Dimensions: 68x62x35mm (57), 85x85x40mm (80).
- Weight: 140g. (57), 230g. (80)
- Supply voltage: 10 ~ 30 V=.
- Supply current: 60mA (57), 135mA (80).
- Input for sensor: 0.5 to 4.5V.
- Open-collector alarm output (max 300mA, active low). This output can also be used to send a tone in the intercom, using the Flybox optional device code 105899.
- Operating temperature range: -20 ~ +70°C.
- Humidity: 90% max (without condensation).
- Communication through 2 CAN bus.
- USB port: for USB 2.0

CLEANING

The screen is very sensitive to some cleaning materials and should be cleaned with a clean, damp cloth only.

One Year Warranty:

Product support and warranty information can be found at www.flyboxavionics.it.
Flybox® warrants this Product to be free from defects in materials and workmanship for 12 months from date of delivery. The inactivity of the Products determined by periods of repair does not involve the extension of the warranty period.
This warranty covers only defects in material and workmanship found in the products under normal use and service when the product has been properly installed and maintained. This warranty does not cover failures due to abuse, misuse, accident, improper maintenence, failures to follow improper instructions or due to unauthorized alterations or repairs or use with equipments with which the Products is not intended to be used. Flybox®, after verification of the complaint and confirmation that the defect is covered by warranty, at its sole discretion, will either replace or repair the Products at no costs for the customer. Alterations, additions, or repairs not performed by the manufactuter shall negate any warranty. This warranty doesn't cover cosmetic or incidental damages. Shipping costs, taxes, custom fee, any other duties and any costs incurred while removing, reinstalling or troubleshooting the Products, shall be at customer's charge.

TO THE EXTENT PERMITTED BY LAW, THE WARRANTIES AND REMEDIES CONTAINED HEREIN ARE EXCLUSIVE AND IN LIEU OF ALL OTHER WARRANTIES EXPRESS, IMPLIED, OR STATUTORY, INCLUDING ANY LIABILITY ARISING UNDER ANY WARRANTY OF MERCHANTABILITY OR FITNESS FOR A PARTICULAR PURPOSE, STATUTORY OR OTHERWISE. THIS WARRANTY GIVES YOU SPECIFIC LEGAL RIGHTS, WHICH MAY VARY BASED ON YOUR JURISDICTION.
TO THE EXTENT PERMITTED BY LAW, IN NO EVENT SHALL UPRIGHT BE LIABLE FOR ANY INCIDENTAL, SPECIAL, INDIRECT, OR CONSEQUENTIAL DAMAGES, WHETHER RESULTING FROM THE USE, MISUSE, OR INABILITY TO USE THIS PRODUCT. SOME JURISDICTIONS DO NOT ALLOW THE EXCLUSION OF INCIDENTAL OR CONSEQUENTIAL DAMAGES, SO THE ABOVE LIMITATIONS MAY NOT APPLY TO YOU.

Out of warranty repairs

Products that can not be repaired under warranty as out of the maximum term or that do not work for reasons that would have been covered by warranty, can be repaired at a flat rate as described on the site. For out-of-warranty eligible damages, the repair must be assessed for each individual case.

Term of Use and Disclaimer

Limitation of Liability

In no event shall MICROEL s.r.l. be liable for any direct, indirect, punitive, incidental, special consequential damages whatsoever arising out of or connected with the use or misuse of its products.

Entire Obligation

The TERM OF USE, WARRANTY AND DISCLAIMER document states the entire obligation of MICROEL S.r.l. with respect to the products. If any part of this disclaimer is determined to be void, invalid, unenforceable or illegal, including, but not limited to the warranty disclaimers and liability disclaimers and liability limitations set forth above, then the invalid or unenforceable provision will be deemed superseded by a valid, enforceable provision that most closely matches the intent of the original provision and the remainder of the agreement shall remain in full force and effect.

General

This disclaimer statement is governed by the laws of ITALY. You hereby consent to the exclusive jurisdiction and venue of the Courts of competent jurisdiction, ITALY, in all disputes arising out of or relating to the use of this product. Use of this product is unauthorized in any jurisdiction that does not give effect to all provisions of these terms and conditions, including without limitation this paragraph.

Date	Revision	Description
02/2019	1.0	First release
04/2021	2.0	Added Omnia80+new background+various

IMPORTANT

Do not send an instrument for repair without first filling out the support form which can be reached by clicking one of the buttons above. After filling out the form, a ticket will be opened and if we believe the instrument needs to be repaired, an RMA number will be sent to you with shipping instructions. Instruments received without an RMA code will be placed at the bottom of the repair queue.

Flybox® reserves the right to change the terms, conditions, and notices under which their products are offered without prior notice".

WARNING: All photos, data, drawings, instruments layouts, technical solutions and data representation you find in this document or watching at FLYBOX® instruments working and/or you can access by means of any other media, including web sites, are sole property of MICROEL s.r.l., cannot be copied or imitate without a written permission of MICROEL s.r.l. itself and are protected by law, even by means of extended international copyright and/or specific patents deposited. Any infringement of this statement and of MICROEL s.r.l. intellectual property will be prosecuted.

©2019 Microel s.r.l. – all rights reserved.

Page Intentionally Left Blank

Flybox® is a registred brand of Microel s.r.l.- Italy
www.flyboxavionics.it

MICROEL s.r.l.
Via Mortara 192-194
27038 Robbio (PV) - ITALY
Tel +39-0384-670602 - Fax +39-0384-671830

Other ManualsLib Projects

www.manualslib.com

www.manualslib.de

www.manualslib.es

www.manualslib.fr

www.manualslib.nl

www.manualslib.mx

www.manualslib.tech 30+ Languages